Stairiser SX

Technical data sheet for wheelchair platform stairlift

1250 x 810 end access

Minimum headroom required	
Angle of stairs	**Dim 'X'**
20°	2117
25°	2224
30°	2342
35°	2476
40°	2629
45°	2810

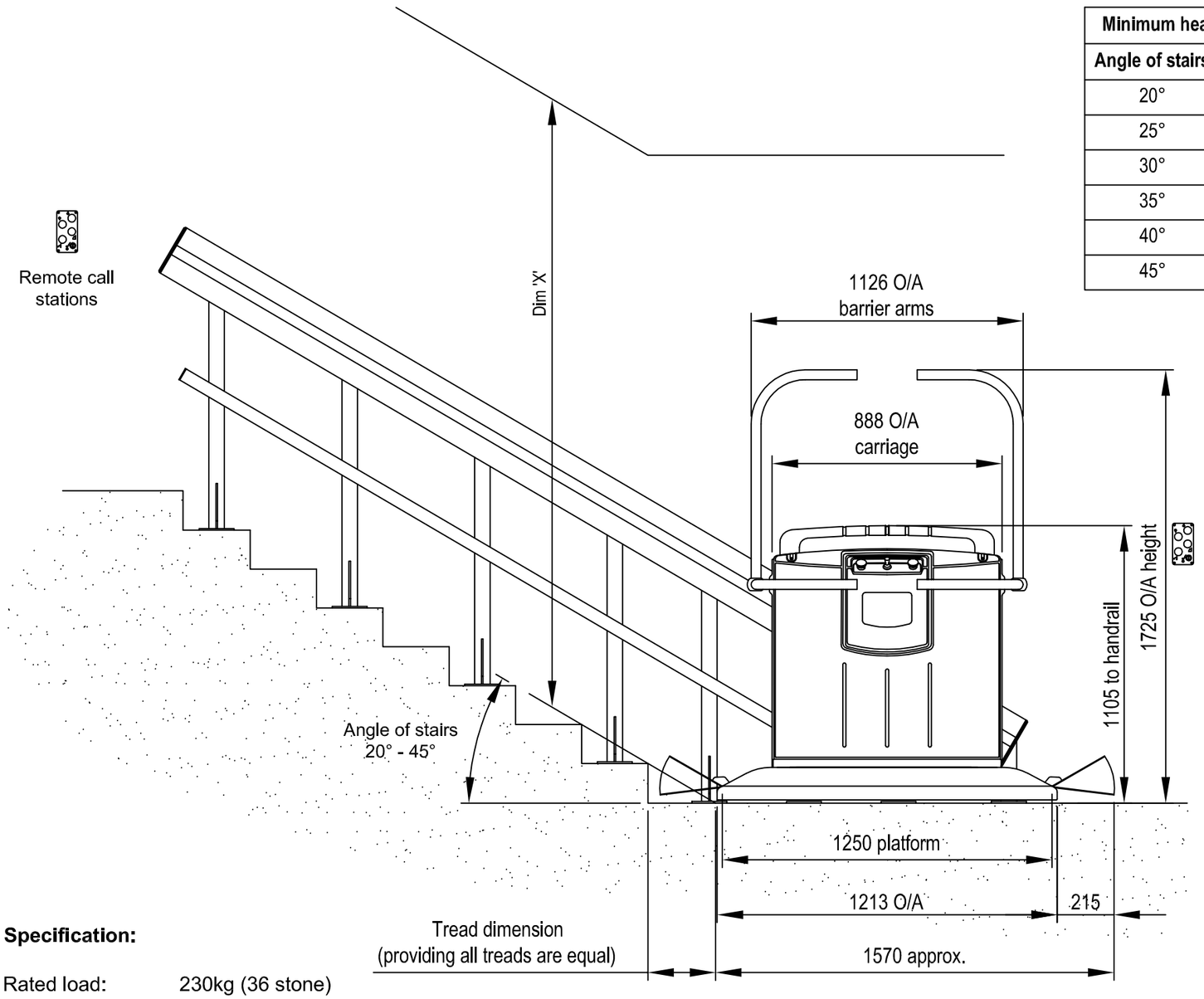

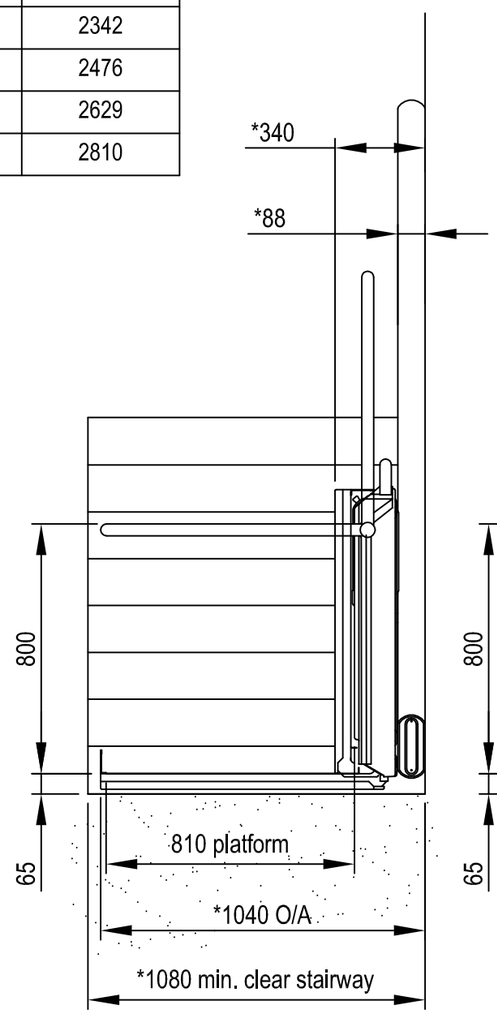

Wall mounted

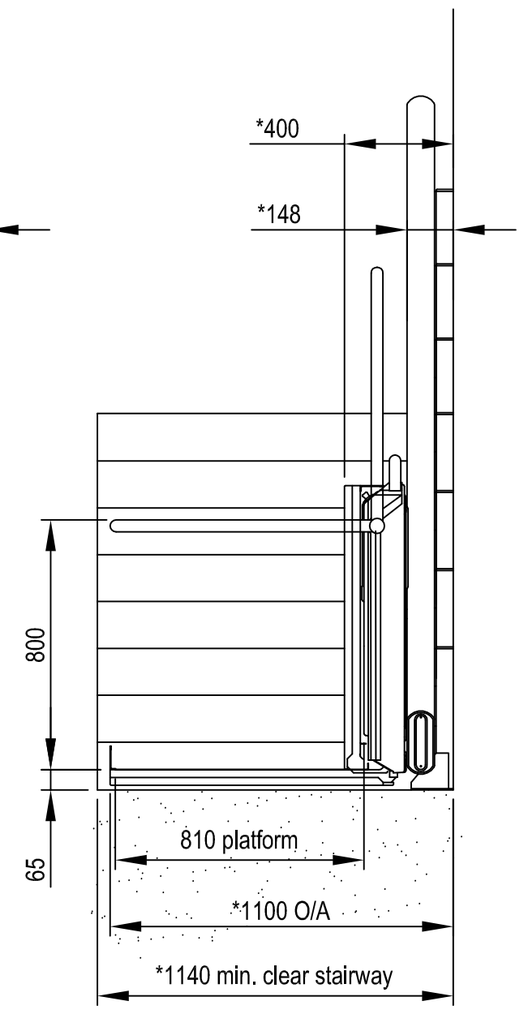

Stair tread mounted

(support stanchions)

Specification:

Rated load:	230kg (36 stone)
Drive:	Rack & pinion
Speed:	0.1m/sec. nominal
Travel:	Up to 20m maximum
Angle of stairs:	20° - 45° maximum
Site:	Straight stairway without intermediate landings. Interior & exterior models available.
Fixing:	Wall mounted or stair tread mounted.
Max. stops:	2
Power supply:	Dedicated 240V single phase AC
Standard:	Complies with ISO 9386-2

***Dimensions do not allow for skirting or stair stringer thickness**

All dimensions in mm unless stated

Waiver

This data sheet is for guidance only & must not be used for proper working drawings. Please contact your dealer for particular details before proceeding. Owing to our policy of continual improvement, we reserve the right to alter specifications & dimensions without prior notice.

Information sheet

SX 704T

27.09.10